BATTERY AND SAFETY WARNINGS

- Do not mix rechargeable and non-rechargeable batteries.
- Do not mix batteries of different types/brands.
- Do not use unsupported batteries with this flashlight.
- Use caution on high outputs or long runtimes as flashlight may get hot.

WARRANTY

Within 30 days of purchase: Return to retailer from which you purchased for repair or replacement.

Within 5 years of purchase: Return to Olight for repair or replacement.

This warranty does not cover normal wear and tear, modifications, misuse, disintegrations, negligence, accidents, improper maintenance, or repair by anyone other than an Authorized retailer or Olight itself.

Technical Support Inquiries
techsupport@olightworld.com

Customer Service
cs@olightworld.com

Visit **www.olightworld.com** to see our complete product line of portable illumination tools.

Olight Technology Co., Limited
2/F, Building A, B3 Block, Fuhai Industrial Park, Fuyong, Bao'an District, Shenzhen , China 518103

V1. MAY 20, 2015

M23 JAVELOT
EXTENDED-RANGE VARIABLE-OUTPUT LED FLASHLIGHT

USER MANUAL

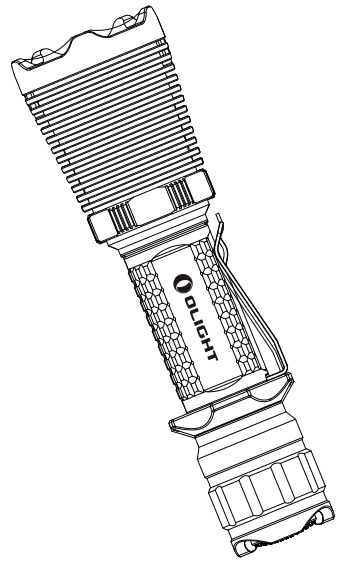

Thank you for purchasing the Olight M23 Javelot flashlight! Please read this manual carefully before using this product.

INSIDE THE BOX
M23 Javelot, battery magazine, holster, (2) o-rings, lanyard, diffuser, user manual

HOW TO OPERATE

ON/OFF: Click the tailcap switch to turn flashlight on.

CHANGE BRIGHTNESS LEVEL (FIG A)
When the light is on, quickly twist the head of the flashlight counter-clockwise then clockwise. With each back and forth twist, the brightness levels will cycle up then repeat low – medium – high. Do not over loosen the head.

HALF PRESSES: When the light is off, 1 half press returns to last used brightness level, 2 half presses goes to highest brightness level, and 3 half presses goes to strobe. Hold for momentary activation or click down for constant on in the setting.

STROBE: When the light is off, half press the tailcap switch 3 times. Hold for momentary strobe or click for constant strobe. Strobe will not be not memorized.

(FIG A)

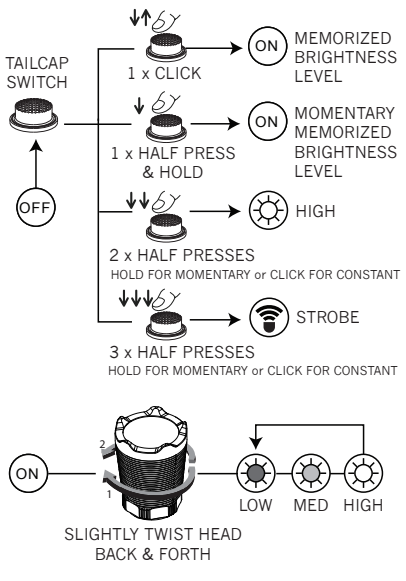

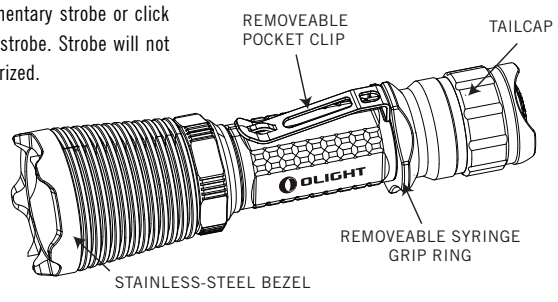

BATTERY INSTALLATION

Ensure batteries are inserted with the positive (+) end pointing to the head. The M23 Javelot will not operate with incorrectly inserted batteries.

SUPPORTED BATTERIES
- 2 x CR123A
- 1 x 18650

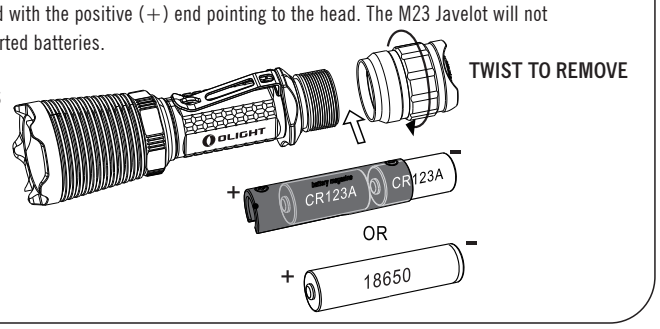

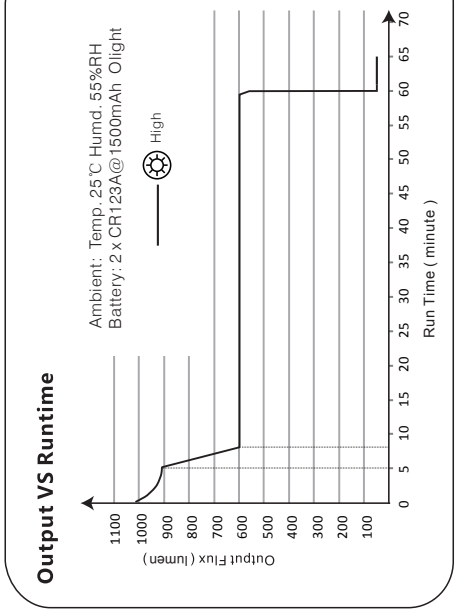

SPECIFICATIONS

HIGH	1020lumens/5min+600lumens/55min
MED	350 lumens / 2 hours
LOW	20 lumens / 30 hours
STROBE	10 Hz / 1020 lumens
LED	Cree XP-L
VOLTAGE	2.8v to 8.4v
CANDELA	47,500 cd
BEAM DISTANCE	436 meters / 1430 feet
BATTERY TYPE	2 x CR123A / 1 x 18650
BODY TYPE	type-III hard anodized aluminum
WATERPROOF	IPX8 (up to 2 meters)
IMPACT RESISTANCE	1.5 meters
DIMENSIONS	L 145mm x D 41mm / 5.71 in x 1.61 in
WEIGHT without battery	152g / 5.36 oz

Note: Tests performed with 2x CR123A(3.0V) 1500mAh batteries

All performance claims to ANSI/NEMA FL1-2009 Standard.